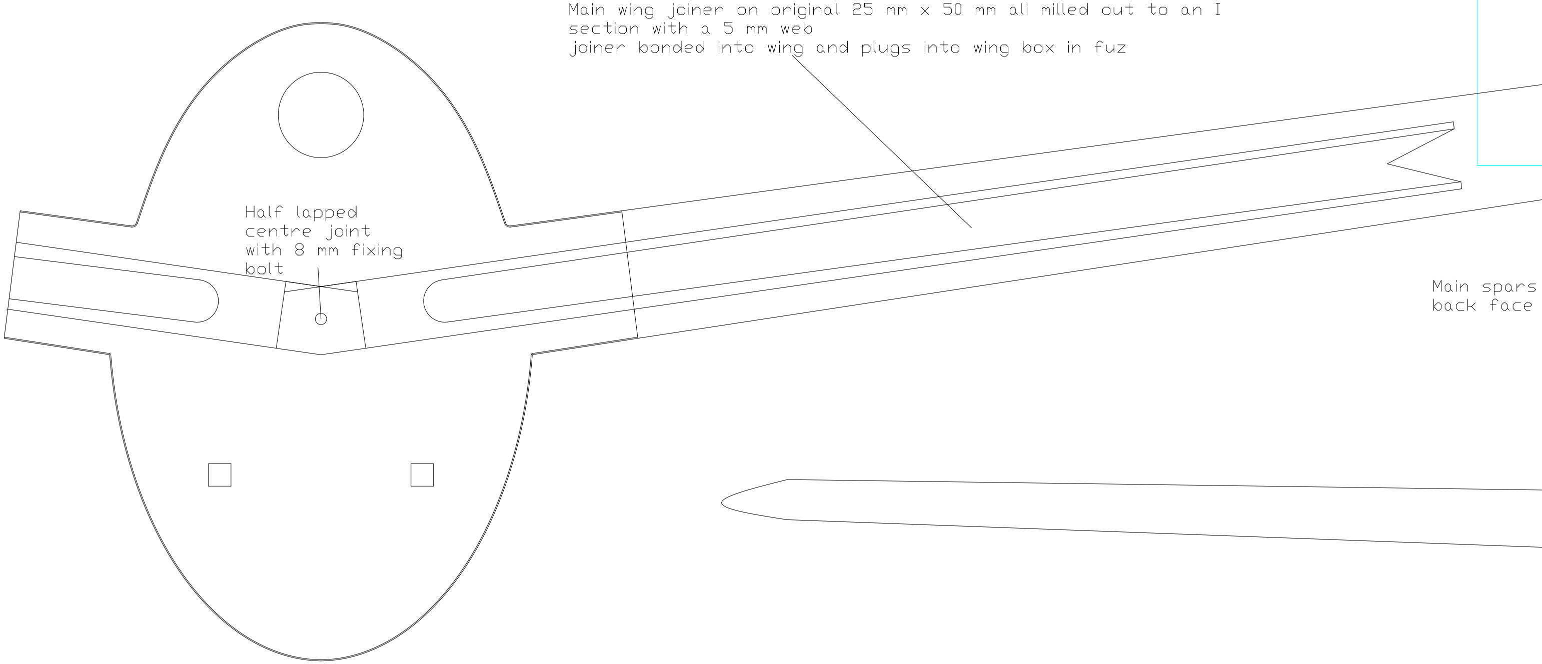
Main wing joiner on original 25 mm x 50 mm ali milled out to an I section with a 5 mm web
joiner bonded into wing and plugs into wing box in fuz
Half lapped centre joint with 8 mm fixing bolt
Main spars
back face

Orlic III
1 : 2.08 Scale glider

Drawn by John Greenfield

Ghost Squadron

Copyright John Greenfield

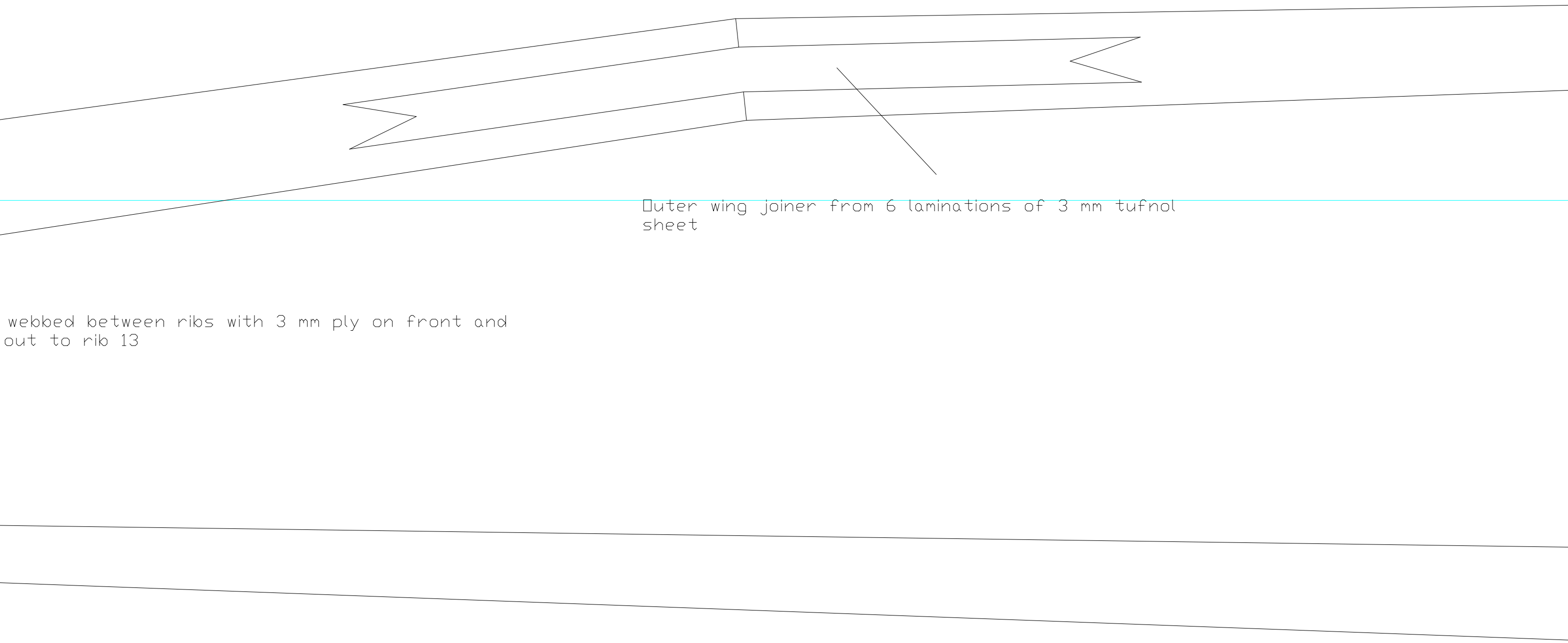

Outer wing joiner from 6 laminations of 3 mm tufnol sheet

webbed between ribs with 3 mm ply on front and
out to rib 13

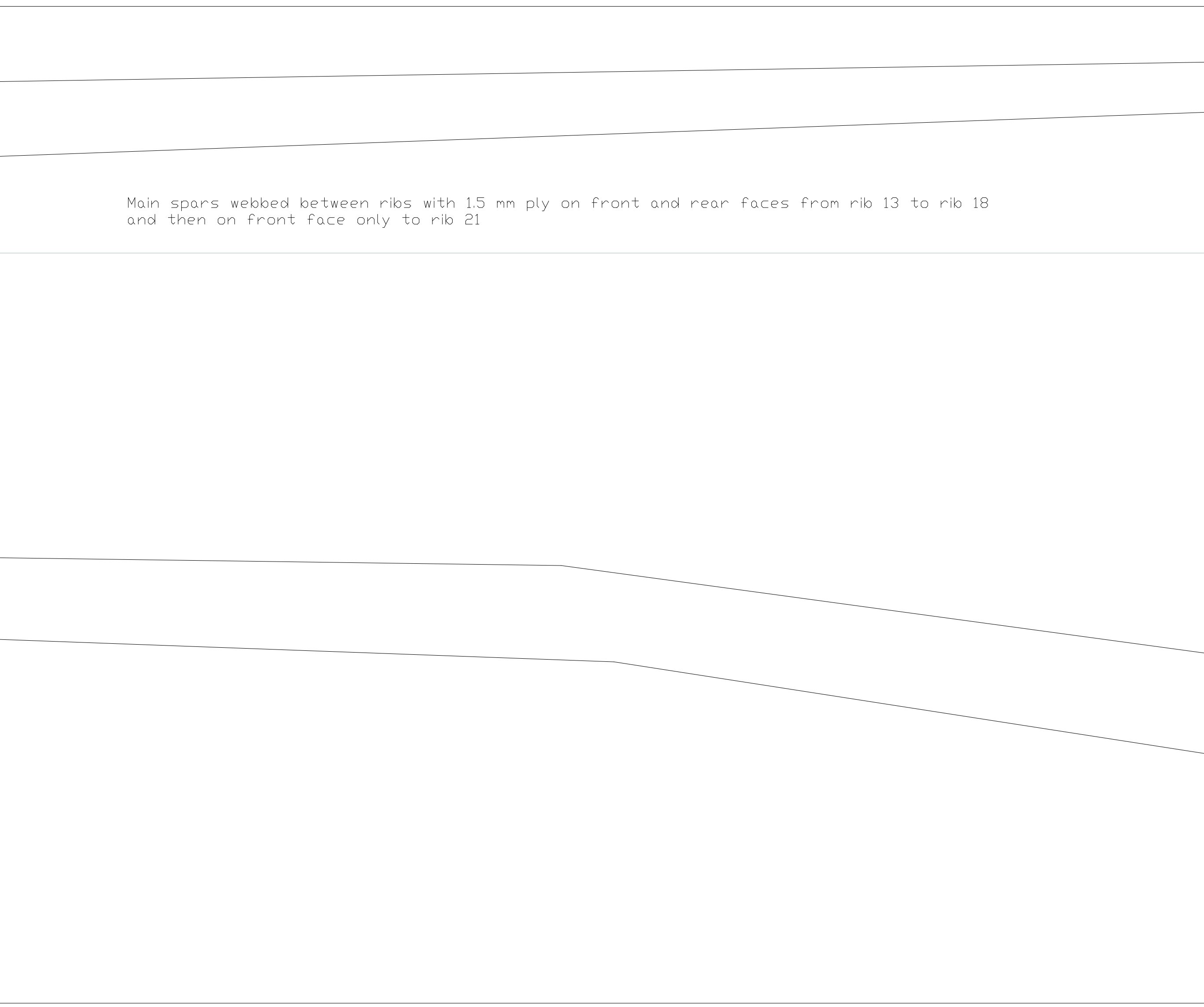

Main spars webbed between ribs with 1.5 mm ply on front and rear faces from rib 13 to rib 18
and then on front face only to rib 21

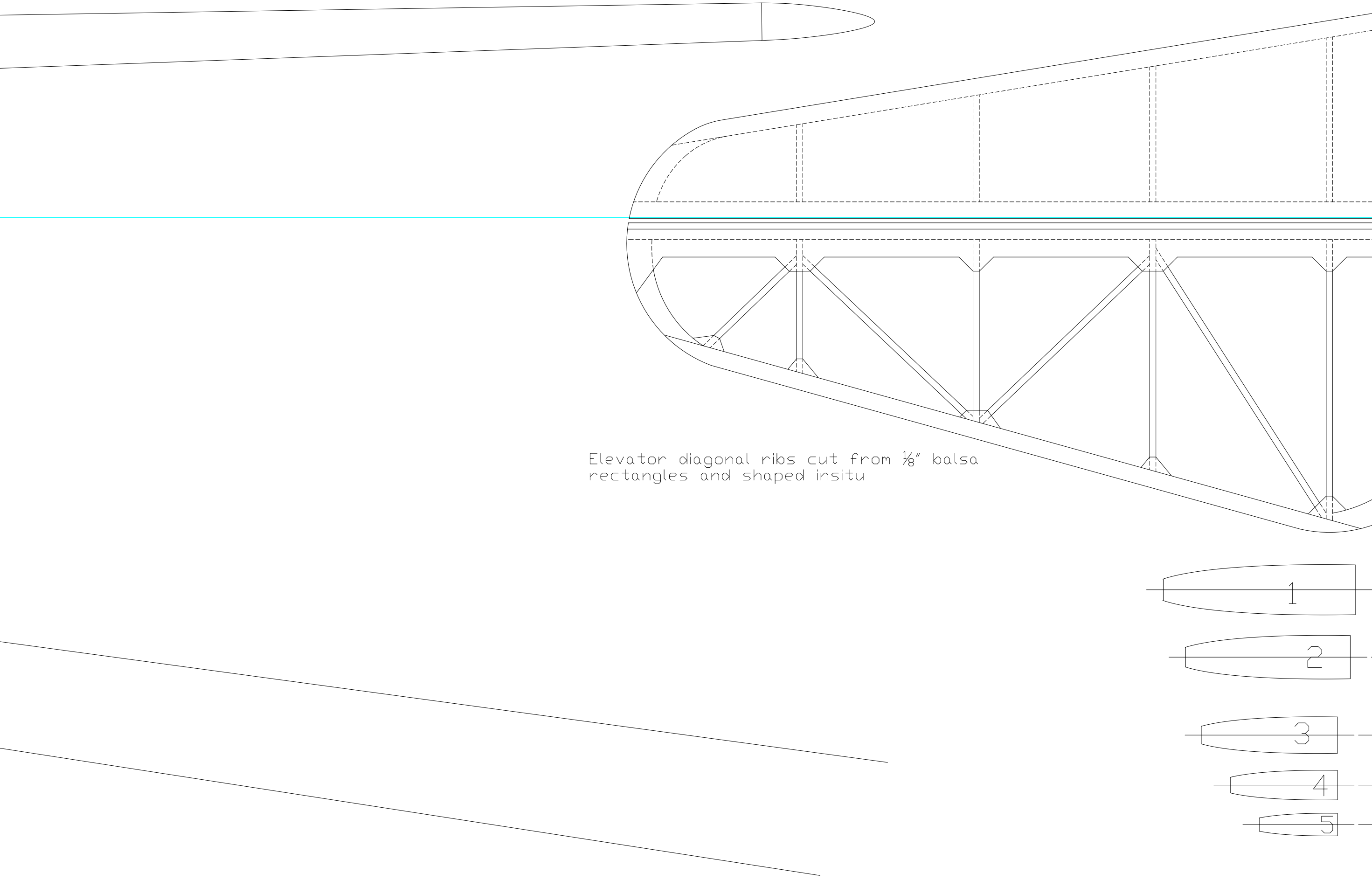

Elevator diagonal ribs cut from ⅛" balsa rectangles and shaped insitu

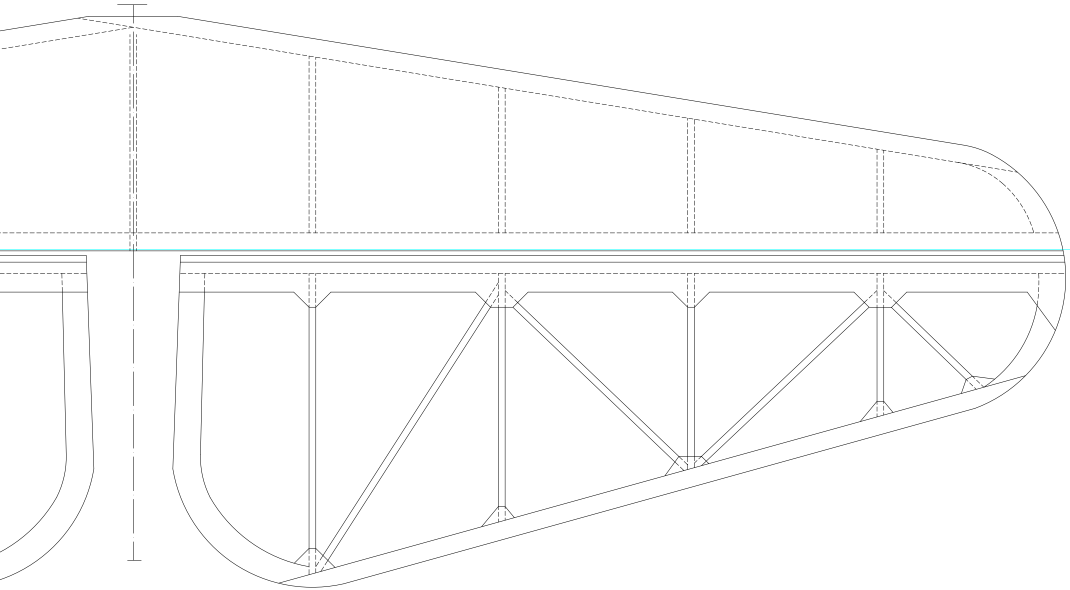

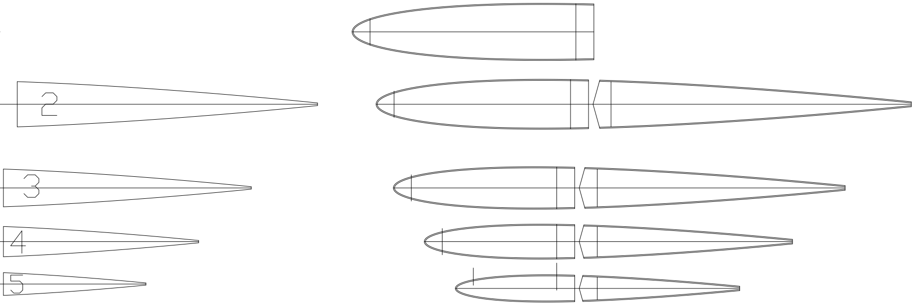

All tailplane ribs $\frac{1}{8}$″ balsa
Tailplane sheeting 0.8mm ply
Elevator outlines from 2 pieces of 0.8 mm ply
with balsa filler between